KONECRANES®
Lifting Businesses™

SMARTER WHERE IT MATTERS

NUCLEAR MATERIAL HANDLING

WE KNOW NUCLEAR

Dear customer,

There is no substitute for experience, and with over a half century in the nuclear business, and thousands of nuclear installations, Konecranes is an expert in the nuclear material handling and lifting business. Konecranes designs, installs and services single failure proof cranes and other highly complex machinery for handling nuclear fuel. We work hard to leverage our time-proven experience with cutting-edge solutions that provide solid benefits to our customers. At the heart of our nuclear team is a large and highly seasoned engineering staff, which includes leading industry experts such as **seismic engineers** and **regulatory experts**. As part of our long-term commitment to the nuclear industry, we provide technical guidance to key industry and nuclear regulatory organizations regarding the design and operation of nuclear material handling equipment.

WE KNOW NUCLEAR, and we want you to know that our solutions are based on solid proven experience you can rely on.

Sincerely,

Steve Waisanen

Vice President, Nuclear
konecranes.com

SMARTER WHERE IT MATTERS

A guide to an outstanding Nuclear Material Handling Equipment & Services company

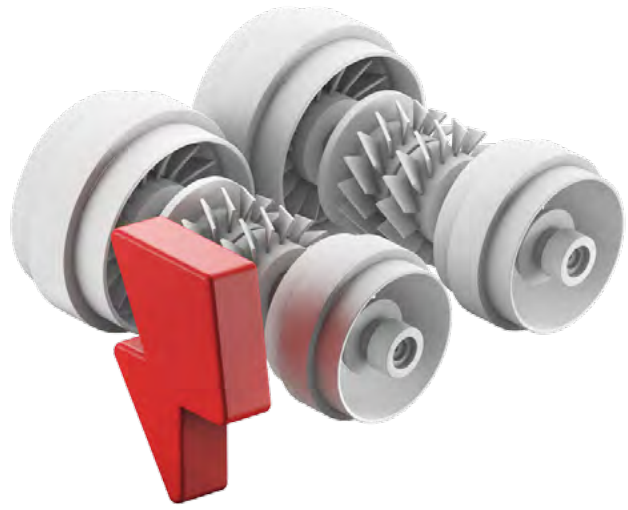

NUCLEAR BOOK

konecranes.com

CONTENTS

NOT JUST LIFTING THINGS, BUT ENTIRE BUSINESSES

We are an industry-leading group of lifting businesses with offices and factories around the globe, so we can deliver and service cranes anywhere. For over 80 years, we have been dedicated to improving the efficiency and performance of our customers and understanding the specialized processes of each of the industries we serve.

We consistently provide products and services that people can trust. When you choose Konecranes, you acquire a unique source of global experience and knowledge combined with local know-how to empower your lifting operations and increase your productivity.

THE COMFORT OF 50+ YEARS EXPERIENCE

Our half-century of nuclear industry experience includes supplying a complete range of heavy-capacity and long-span nuclear polar cranes, over 150 nuclear fuel transfer machines, and many other types of nuclear lifting equipment. We meet stringent nuclear regulatory requirements, and we are members of key regulatory and advisory groups, such as the ASME NOG-1 committee, which set standards for the design of lifting equipment operating at nuclear facilities.

KONECRANES – CAPABLE AND QUALIFIED

The nuclear power industry depends on equipment that is designed to operate safely, reliably, and in compliance with stringent quality and regulatory requirements. Very few companies are qualified to comprehensively serve the nuclear industry in their area of specialty. Konecranes can expertly provide all nuclear material handling equipment, services, and equipment modernizations needed in nuclear power plants, nuclear waste storage and fuel processing facilities including the most critical safety-related lifting equipment.

Quality control

Konecranes maintains an active nuclear quality-control program that has been audited and approved in compliance with almost every relevant worldwide regulatory standard. Our nuclear quality-control program implements stringent quality, testing, and documentation requirements and can be customized to meet local standards. It is specifically designed to safeguard each phase of your project's engineering, manufacturing, and site activities.

Technology leader

Konecranes has provided equipment and services to numerous nuclear power-generation facilities worldwide. In fact, in partnership with our global operations, we originally developed many key nuclear material handling designs and concepts. For example, Konecranes was heavily involved in the original development of single failure proof cranes for the nuclear industry, which are used to lift loads for critical applications.

Comprehensive experience

The Konecranes nuclear engineering department consists of some of the most experienced and talented technical experts in the nuclear material handling business. We have over 100 engineers dedicated exclusively to nuclear applications. Our nuclear engineering team has unprecedented experience and can handle both small and large projects inside and outside containment areas. The team is capable of producing almost any kind of custom-designed material handling equipment for nuclear facilities.

In-house engineering and analyses

We are one of the few suppliers in the material handling business that has the capability to complete engineering analyses in-house with our own engineering personnel. Our staff includes engineers in every discipline applicable to nuclear material handling, including specialized areas such as seismic analysis, safety analysis, and regulatory compliance.

ACTIVE IN
50
COUNTRIES

OVER
50
POLAR CRANE
INSTALLATIONS

OVER
600
LOCATIONS
WORLDWIDE

OVER
150
FUEL HANDLING
INSTALLATIONS

OVER
65%
OF NUCLEAR
FACILITIES
GLOBALLY HAVE
OUR PRODUCTS

AUDITED
AND APPROVED
NUCLEAR
QUALITY-CONTROL
PROGRAM

GLOBAL SERVICE NETWORK

As part of the Konecranes total service commitment to the nuclear power industry, we maintain a worldwide network capable of servicing our own as well as other manufacturers' equipment. Our technicians routinely work at nuclear power generation facilities, and are specifically trained to comply with nuclear safety and regulatory requirements.

Konecranes has both the local presence to support customers on site and a global technical team. Our expertise in determining how nuclear plant maintenance can be handled most cost-effectively has given us a solid reputation for serving our customers well.

As a global company, we can provide the same know-how and service to customers everywhere. It's the combination of global technical expertise and local relationships that our customers value.

The Konecranes advantage
Konecranes has a valuable mix of capability, experience, resources, products and services to support customers worldwide.


KONECRANES

SMARTER WHERE IT MATTERS

At Konecranes, we provide equipment and service based on proven, well-engineered technologies. Our customers benefit from our half-century of experience in the nuclear industry, dating back to the construction of the first generation of nuclear power plants.

WELL ENGINEERED – PROVEN RESULTS

The professionals we serve understand that there is no substitute for lessons learned through long and challenging experience. In fact, they often tell us that their success depends on the responsive service and leading nuclear industry knowledge of Konecranes professionals, worldwide.

If it lifts, we've got it

We take pride in being able to offer our customers a complete line of products and services for virtually every type of lifting equipment relevant to the nuclear industry. Our capabilities range from standardized conventional lifting devices to highly complex SUPERSAFE™ single failure proof cranes and nuclear fuel handling equipment. Our comprehensive range of nuclear lifting equipment and services uniquely qualifies us in the industry. We think it's important to understand how it all fits together.

From standardized conventional lifting devices to highly complex SUPERSAFE™ single-failure proof cranes, Konecranes can provide it all.

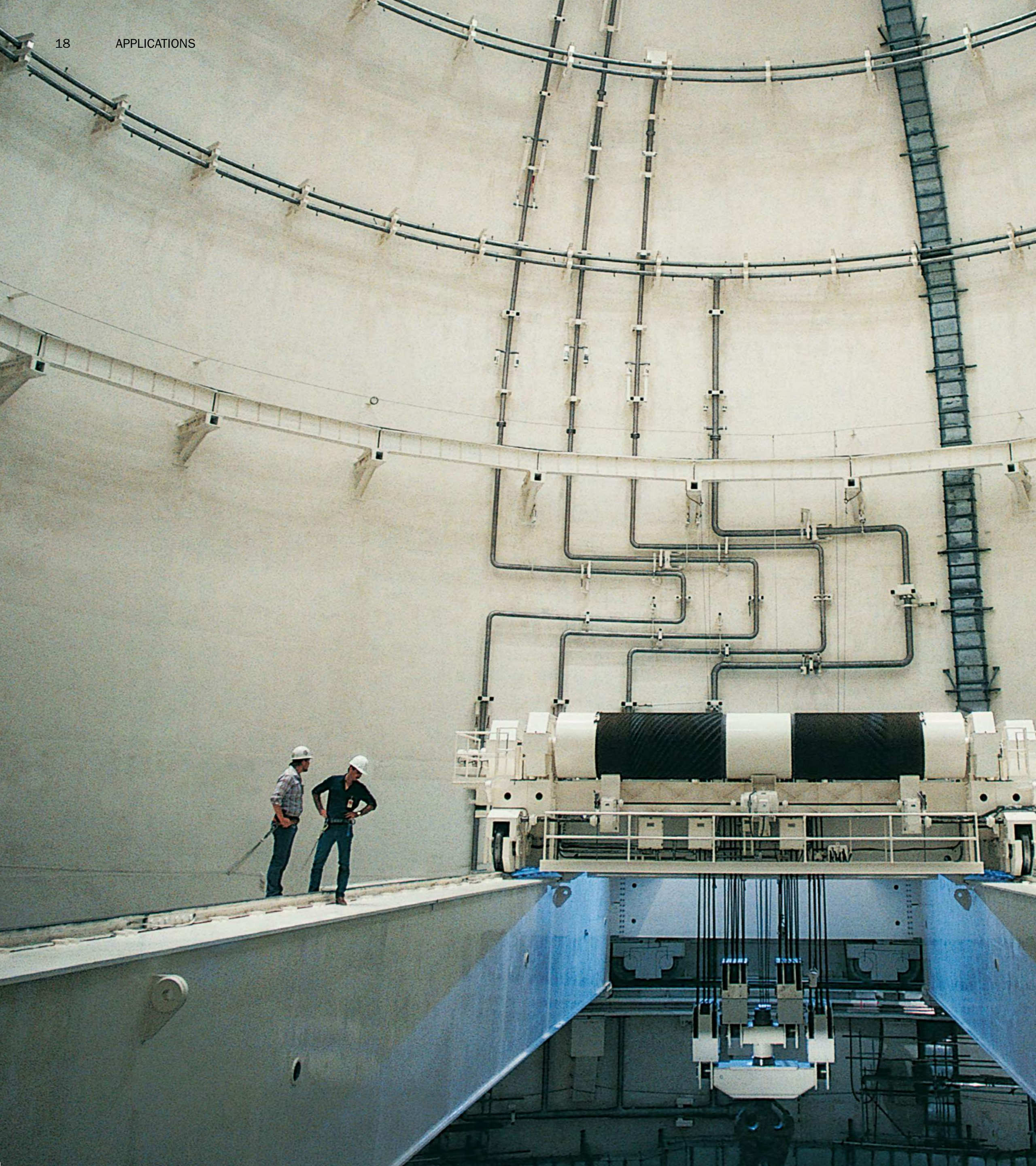

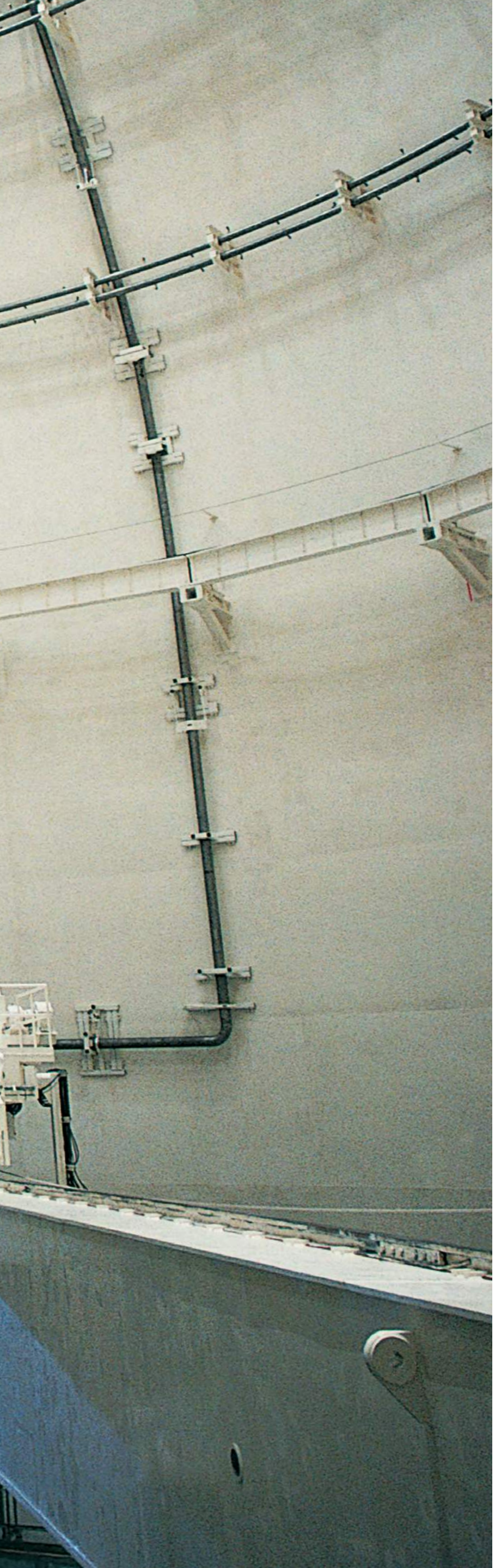

Nuclear Polar Cranes

THE NEXT STEP IN THE EVOLUTION OF DESIGN

Our latest evolution of polar cranes utilizes a multipurpose design that maximizes operational capability by combining numerous lifting features into a single compact and weight-efficient trolley. The design improves productivity and reliability by providing four primary lifting systems including a main hoist, auxiliary hoist, maintenance jib crane, and containment inspection man lift, all located on one trolley.

The polar crane main and auxiliary hoists are designed to perform typical plant maintenance and operational functions. Both hoists can be provided with a single failure proof or non-single failure proof design.

To facilitate multipurpose lifting, a maintenance jib crane is typically mounted on the main trolley, designed to provide lifting capability during maintenance operations of the entire polar crane. This reduces the need for cumbersome lifting equipment that is typically provided by the customer's plant on a temporary basis to complete polar crane maintenance.

An additional feature of the multipurpose polar crane design is the containment dome inspection and maintenance station. This cleverly designed device utilizes a telescoping lifting device, which is installed on the multipurpose trolley to provide a simplified, safer, and cost-effective method for inspecting and maintaining the containment dome. The Konecranes modular polar crane design takes polar cranes to the next step of crane performance.


KONECRANES

Cask Transporters

MOVING SPENT FUEL MORE SAFELY AND MORE CONTROLLED THAN EVER BEFORE

The latest generation of Konecranes spent fuel nuclear cask transporters are designed to safely and efficiently handle most nuclear dry storage casks. To provide a high level of safety, load drop protection is standard, and the ergonomic controls simplify operation.

Our transporters are available in both rubber-tire and track-driven designs capable of handling up to 350 tons. The rubber-tire version can be driven on most types of roadways without damaging the roadway surface. Our cask transporters offer the smallest possible turning radius, including full rotational capability. They can be easily shipped to locations worldwide in standard shipping containers and are specially designed for simple assembly in the field in just one day.

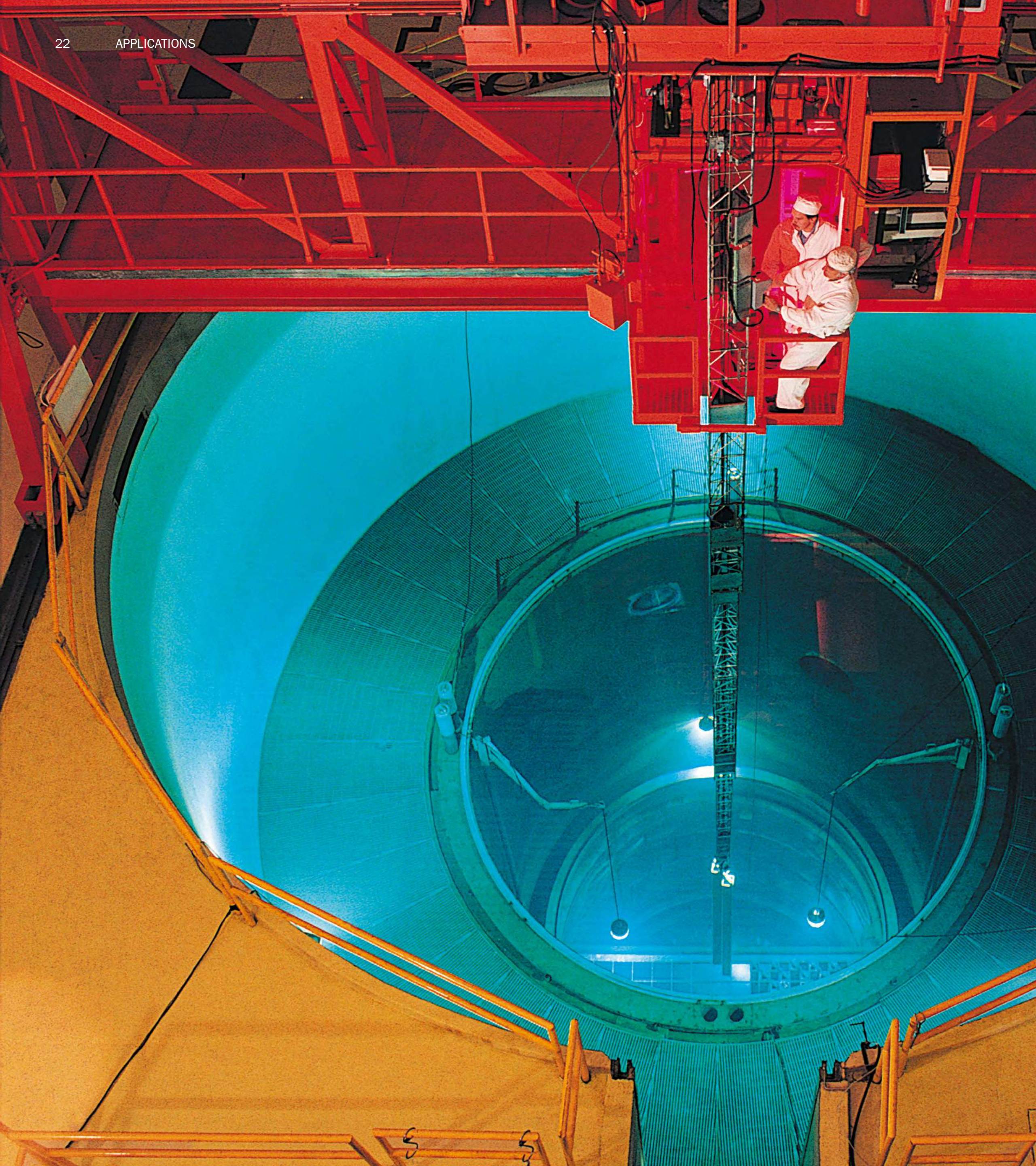

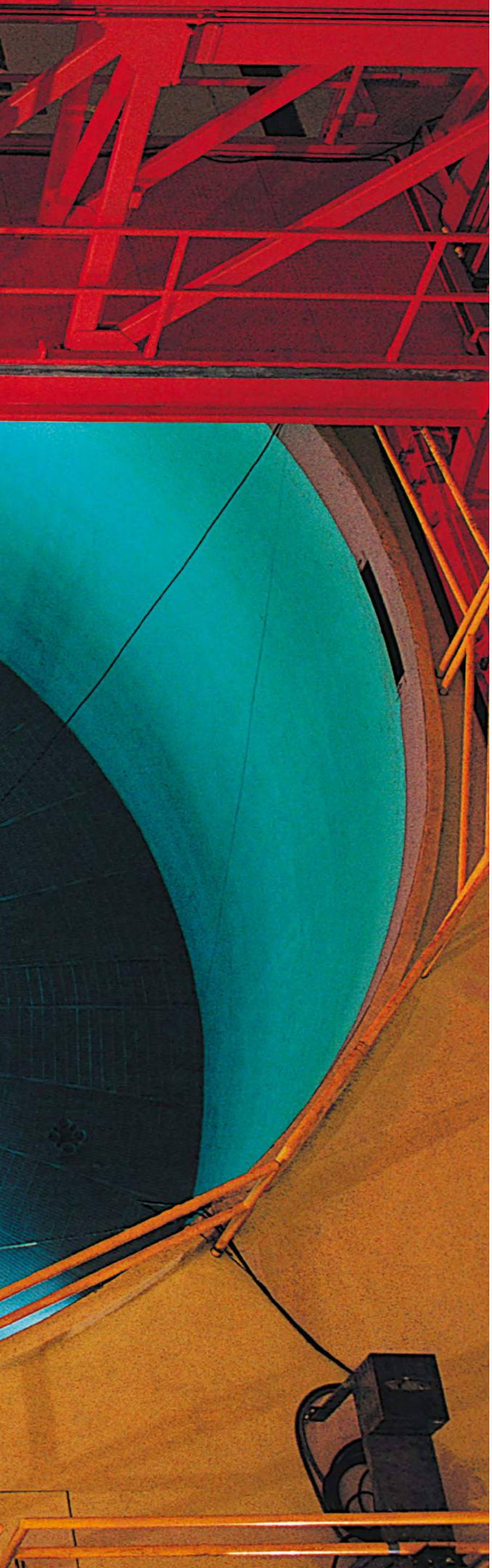

Fuel Handling

SAFE, EFFICIENT, COMPLIANT

There is no substitute for experience, and with over 150 existing fuel handling installations, Konecranes has the experience and knowledge to aid the success of your project. Konecranes nuclear fuel handling equipment utilizes SUPERSAFE single failure proof technology, which is designed to comply with stringent nuclear worldwide regulatory requirements. Key safety and diagnostic systems continuously monitor equipment operation, which is displayed to the operator in real-time graphics.

Konecranes fuel handling equipment is designed to provide improved operating cycle efficiency and minimize refueling costs. Operators controls are ergonomically designed to allow simplified operation and increased safety.

Cask Handling

CONFIDENCE FROM EXPERIENCE

Konecranes is a leader and global supplier of nuclear cask handling cranes for dry cask storage. These specialized cranes utilize our latest generation of SUPERSAFE single failure proof technology to safely and efficiently move nuclear spent fuel.

Konecranes cask handling cranes employ many specialized and innovative features. Our continuous research and development program employs the latest cutting-edge technology, while maintaining a core technology that is based on time-proven nuclear designs.

Konecranes engineers understand the complexity of nuclear cask handling and the importance of coordinating precision operation, safety and reliability. Handling nuclear fuel is a serious undertaking that requires knowledge and experience.


KONECRANES

Turbine Hall

TAKE NO CHANCES

Besides the fact that Konecranes has supplied more than 100 large turbine hall cranes to nuclear power plants, Konecranes has also supplied hundreds of these types of cranes to non-nuclear power plants. Konecranes turbine hall cranes include many design features to improve performance, such as on-board diagnostics, precise positioning and remote operator controls.

We also understand the importance of the bottom line and as such, provide one of the most weight-efficient designs in the industry, which not only reduces the initial cost of the crane but also reduces the cost of the crane support structure. For those applications where the highest degree of safety is required, we offer our SUPERSAFE single failure proof design, which includes the most advanced safety features in the industry.

OUR KNOWLEDGE SETS US APART

Key to our success in the nuclear industry is our commitment to employing a large and highly diversified in-house engineering team. The Konecranes engineering team consists of more than 100 engineering personnel, including seismic, safety, and regulatory compliance specialists with significant nuclear experience. By completing engineering in-house, we are able to reduce costs, improve quality, and simplify communication with our customers.

TRACK RECORD OF SUCCESS

The combination of our time-proven technology and our extensive engineering resources is a key part of our formula for success. Quest for excellence has resulted in an extraordinary record of success, and to date, Konecranes has never experienced a nuclear regulatory reportable defect. Additionally, as an industry leader, our research and development team is continuously applying cutting-edge technology to our products, resulting in many exclusive Konecranes patented lifting innovations.

Some of our engineering services:

- Structural design and seismic analysis
- Prototype design
- Equipment relocations
- PLC programming, software development and equipment automation
- Feasibility studies
- Accident investigation
- New construction design and material flow analyses
- Failure analysis and solution resolution
- Modernization analysis and recommendations

Konecranes nuclear engineering team has secured more than 30 patents and pending patents and industry-leading designs.

UNDER THE UNIFORM – IT'S PEOPLE

Konecranes is uniquely qualified as a provider of service, parts and modernizations to the nuclear industry. A distinct advantage we offer our customers is the ability to provide services on a worldwide basis.

The current Konecranes organization consists of almost 600 locations worldwide providing a response that is fast and efficient. Whether you need outage support, routine maintenance, engineering support, or anything in between, we have people you can rely on.

Compliance is a routine matter for our experts

The ability to complete modernizations and supply parts to the nuclear industry requires compliance with stringent regulatory and quality requirements. Konecranes has the capability to provide parts and services in compliance with these standards through the utilization of its audited and approved nuclear quality-control program. As a global company, Konecranes is able to facilitate compliance with localized requirements anywhere in the world with industry experts and localized know-how.

Highly trained professionals

Konecranes service technicians are highly trained to work in nuclear power generation facilities. These technicians are the most talented and experienced, and have the know-how and credentials required to work inside a nuclear power generation facility. Konecranes technicians are trained in every aspect of maintaining and servicing nuclear lifting equipment. In addition to expert technical knowledge, each Konecranes technician is highly trained to comply with site safety requirements.

Experienced modernization specialists

Konecranes has completed many modernizations at nuclear power generation facilities. In order to extend the operating life of existing nuclear power generation facilities, nuclear plant operating licenses are often extended. As part of this license extension process, equipment is often upgraded to include enhanced safety features, modernized technology, and improvements in reliability. Konecranes technicians routinely modernize both our own and other manufacturers' equipment.

Our experienced service team knows how to minimize downtime during refueling outages and revisions.


KONECRANES

WE NEVER LET THE CUSTOMER DOWN

CONSTELLATION ENERGY

New York

New equipment in an established environment

Konecranes was tasked with upgrading Constellation Energy's ability to handle spent nuclear fuel kept in dry storage casks. They needed turnkey delivery of a 125-ton single failure proof crane in a building that was not originally designed to support the loads of the new crane system.

Specialized crane design and implementation

The Konecranes technical team assigned to this project worked closely with the customer and regulatory personnel to assess various potential designs and to address the high-level technical challenges associated with this project. The team also provided detailed reports to verify and validate that all project requirements could be achieved.

As a result of this detailed analysis, Konecranes developed a specialized design for the new crane that did not impose any additional load on the existing building. The specialized crane system designed by Konecranes used a unique rolling bridge telescoping boom system that transferred the load of the crane to a location outside of the building.

Telescoping boom system makes lifts possible with building modifications

The innovative rolling bridge telescoping boom system allowed the crane to make the critical 125-ton lifts that were required inside the building, without the need for extensive and expensive structural analysis and building modifications.

The 125-ton single failure proof crane provided by Konecranes is possibly the most technologically innovative single-failure-proof crane ever built for the nuclear industry. This unique crane system is now utilized by our client to handle nuclear dry storage casks safely, efficiently and reliably.

"Konecranes came up with a new solution based on our current situation. It was an innovative idea, and they presented the model that showed the outcome."

Mark Fitzsimmons
Manager of Plant Operations, Principle Engineer

COOPER NUCLEAR

Brownsville, Nebraska

An outdated equipment base

Cooper Nuclear was entirely dependent on an aging 197-ton turbine crane to perform required maintenance during refueling outages at its Brownville, Nebraska facility. The thirty-year-old crane was becoming more of a question mark every year. Declining reliability and obsolete technology were the central issues. Parts were getting harder to find, and breakdowns were increasing. For Cooper, crane downtime during an outage was extremely costly. Their critical path time was around $50,000 per hour.

Implementing control-system and component retrofits

Problems caused by outdated controls and breakdown issues related to the load brakes and hoist gearboxes had become more frequent. During a previous refuel outage in 2003, the load brake assembly in the main hoist gearbox malfunctioned with a turbine hanging in the air. Cooper had to extend the upper limit switch to give more room between the load and bottom of the hoist to bring it back down safely. Originally the crane was designed for cab control coordinated between the operator in the cab and a spotter/rigger on the floor. Konecranes recommended that Cooper install radio controls to speed up the procedure and make it unnecessary to have an operator in the cab. The existing control system was replaced with Konecranes vector drives for speed, smooth operation and reliability. The retrofit also specified new brakes, motors, variable frequency drives on all motions, new electrical control panels and festoon system, and a new runway conductor bar system.

Available for service

Although all Konecranes technicians were already assigned to other projects at the time this project was scheduled to be completed, it took less than one day for Konecranes to allocate personnel to the project. Konecranes completed the work, including a load test with 412,000 pounds of weight in a very restricted area, exactly on time. As a result of this modernization, the Cooper turbine hall crane now provides reliable service and has considerably reduced outage costs.

The reliability of the turbine crane during outages is crucial as the plant's downtime costs are around $50,000 per hour. As a result of this modernization, the Cooper turbine hall crane now provides reliable service and has considerably reduced outage costs.

RINGHALS

Gothenburg, Sweden

Modernizing reactor cranes

Konecranes evaluated the feasibility to modernize twelve Ringhals nuclear plants cranes in Gothenburg, Sweden. The cranes had been delivered by Konecranes about 30 years earlier, when the nuclear plant was built. The contract covered the modernization of reactor cranes, turbine hall cranes, polar cranes and the fuel building crane, including replacement of existing trolleys and electrical control systems.

Implementing the latest advances on a tight schedule

Ringhals contract with Konecranes included a turn-key delivery. The Konecranes work scope included design and engineering, manufacturing of components, documentation, factory testing, assembly and site acceptance tests. Because of the nature and size of the project, very close co-operation was required between Konecranes, the customer and the certification body.

Thorough tests were carried out before the delivery of each trolley and new motor controls. Konecranes built a comprehensive test facility, which included a 150-ton test fixture with adjustable test loads.

Due to Ringhals's tight schedules, Konecranes had only eight days for the most demanding assembly of the reactor building polar cranes. To make certain that the deadline would be met, a 3D-animation was used for validated co-ordination and training. The entire installation was carried out around-the-clock, in three shifts.

The modernized cranes were equipped with the latest inverter-based motor drives and controls, new wireless remote operators controls and Konecranes custom-designed PLC-controls. The project consisted of nine deliveries. The first delivery took place in March, 2006 and the ninth in July, 2009.

To meet the customer's strict safety requirements, numerous innovative features were added to the crane. The entire load path was upgraded to include single failure proof features, thereby significantly improving safety and reliability. Redundant braking added an additional level of safety to the hoisting system.

A 3D animation model precisely depicted the entire installation process within the restricted work area in the reactor building. This helped to meet an extremely tight schedule.

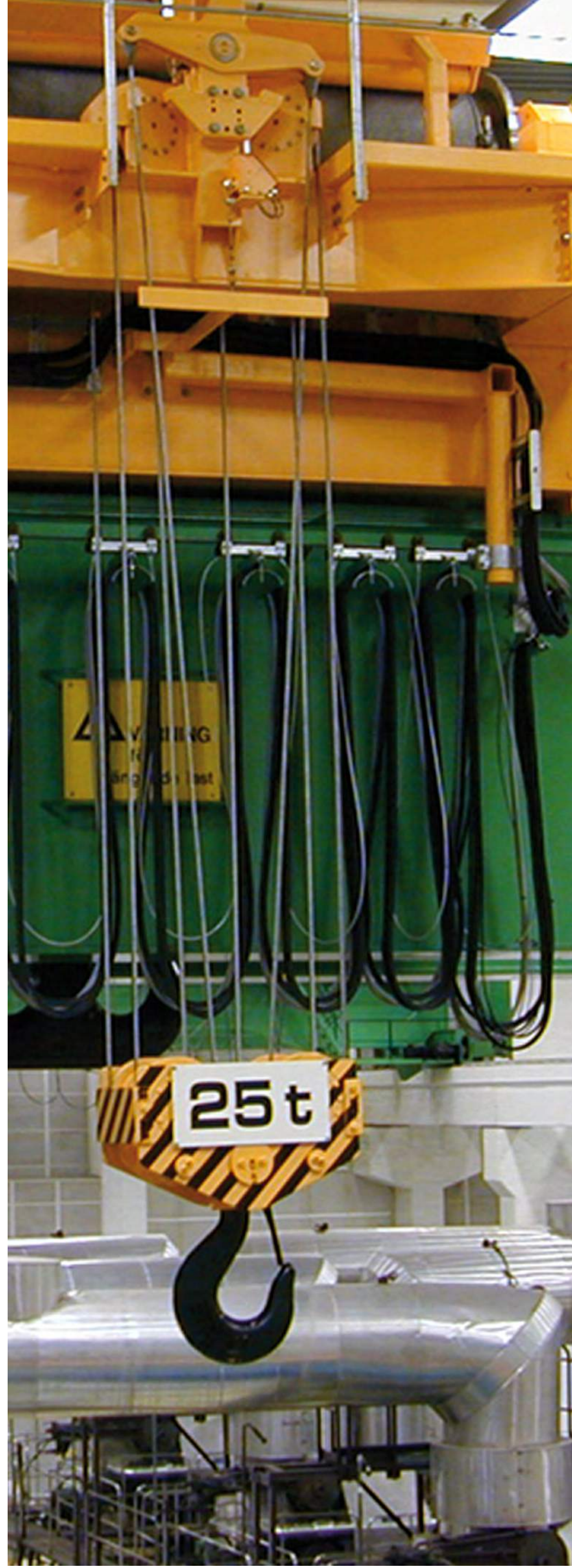

ARIZONA PUBLIC SERVICE

Arizona

Maintaining crane reliability

Arizona Public Service (APS) operates the largest nuclear power generating station in the United States. The plant is equipped with three 225-ton polar cranes that were supplied by a competitor of Konecranes during the initial construction of the plant 30 years ago. The reliability of these cranes is essential to the performance of the facility.However, due to the age of the cranes, they were prone to breakdown and frequent reliability issues. Typical downtime can cost as much as $1,000,000 per day in non-productive outage time.

Modernizing crane controls

As part of a competitive bid process, Konecranes was selected to upgrade the APS cranes. After assessing the condition of the cranes, Konecranes determined that the reliability problems could be dramatically improved by replacing the existing crane electrical controls with modern solid-state variable-frequency crane controls. In addition to providing increased reliability, the new electrical controls provided improved crane positioning accuracy, which is vital to certain operations.

To improve the safety of the crane, a new Konecranes SUPERSAFE hoist and trolley was designed to replace the existing unit. The SUPERSAFE design utilizes multiple safety features that prevent load drop during any single failure of the lifting system. In addition to the safety improvements the SUPERSAFE design provided, it also included other benefits such as on-board crane diagnostics, improved reliability, and more user-friendly operation. User interface was also dramatically improved by adding a remote radio operator's control to the crane system.

Increased safety and long-term payback

The Konecranes solution for APS provides a significant safety and reliability improvement that results in continuous long-term payback. Additionally, crane operability and operator interface has significantly improved, and the cranes can now accomplish more tasks in a shorter period of time.

Unreliable cranes are expensive, as downtime may cost as much as $1,000,000 per day during outages. The Konecranes solution for APS provides a significant safety and reliability improvement that results in continuous long-term payback.

TECHNOLOGY AND EQUIPMENT

WE ARE THERE IN EVERY PHASE OF YOUR PROCESS

SAFETY-RELATED EQUIPMENT

1. Polar crane
2. Cask transporter
3. Fuel handling equipment
4. Turbine crane
5. Cask crane

STANDARDIZED EQUIPMENT

6. SMARTON® crane
7. Jib crane
8. CXT trolley

SERVICE

9. Service and outage support

WE ALSO PROVIDE

- Maintenance cranes
- Hoists

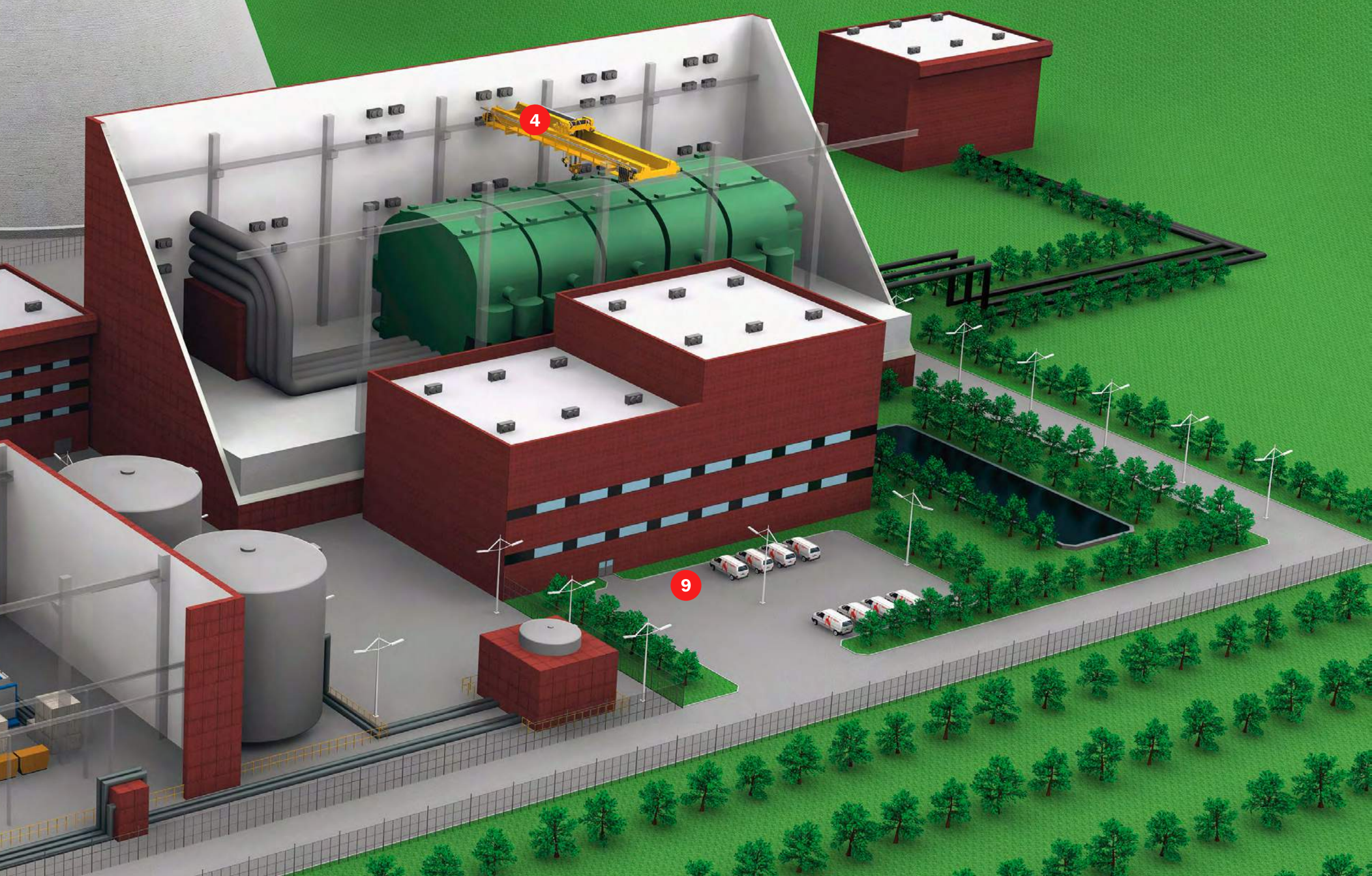

SINGLE FAILURE PROOF TECHNOLOGY

Konecranes SUPERSAFE single failure proof cranes provide an unprecedented level of safety for the most critical nuclear operations, such as nuclear fuel handling. These highly specialized cranes are designed to prevent load drop during a single failure of the lifting system.

Our latest third-generation single failure proof design is founded on solid experience gained over decades of machine design, field installations and service support. It meets the most stringent nuclear regulatory standards, such as ASME NOG-1 and NUREG-0554. History has shown that many of the patents and unique single failure proof nuclear designs that were originally developed by Konecranes and its acquired companies have become the basis for single failure proof designs. Our paper titled "Single Failure Proof Hoisting System for Use on Reactor and Spent Fuel Cask Cranes in Nuclear Power Plants (CS-71)," released in 1978, had concepts and pictures that are still illustrated in regulatory standards such as ASME NOG-1. No other crane company can point to the depth of experience in critical single failure proof experience that exists at Konecranes.

To provide our customers the best possible single failure proof design, we take extraordinary measures to understand how our equipment will perform over long periods of time. As an example, our single failure proof design has been tested under severe and rigorous industrial operating conditions simulating more than 40 years of normal nuclear operation. This process provides our customers with the advantage of time-proven technology that provides benefits where it really matters.

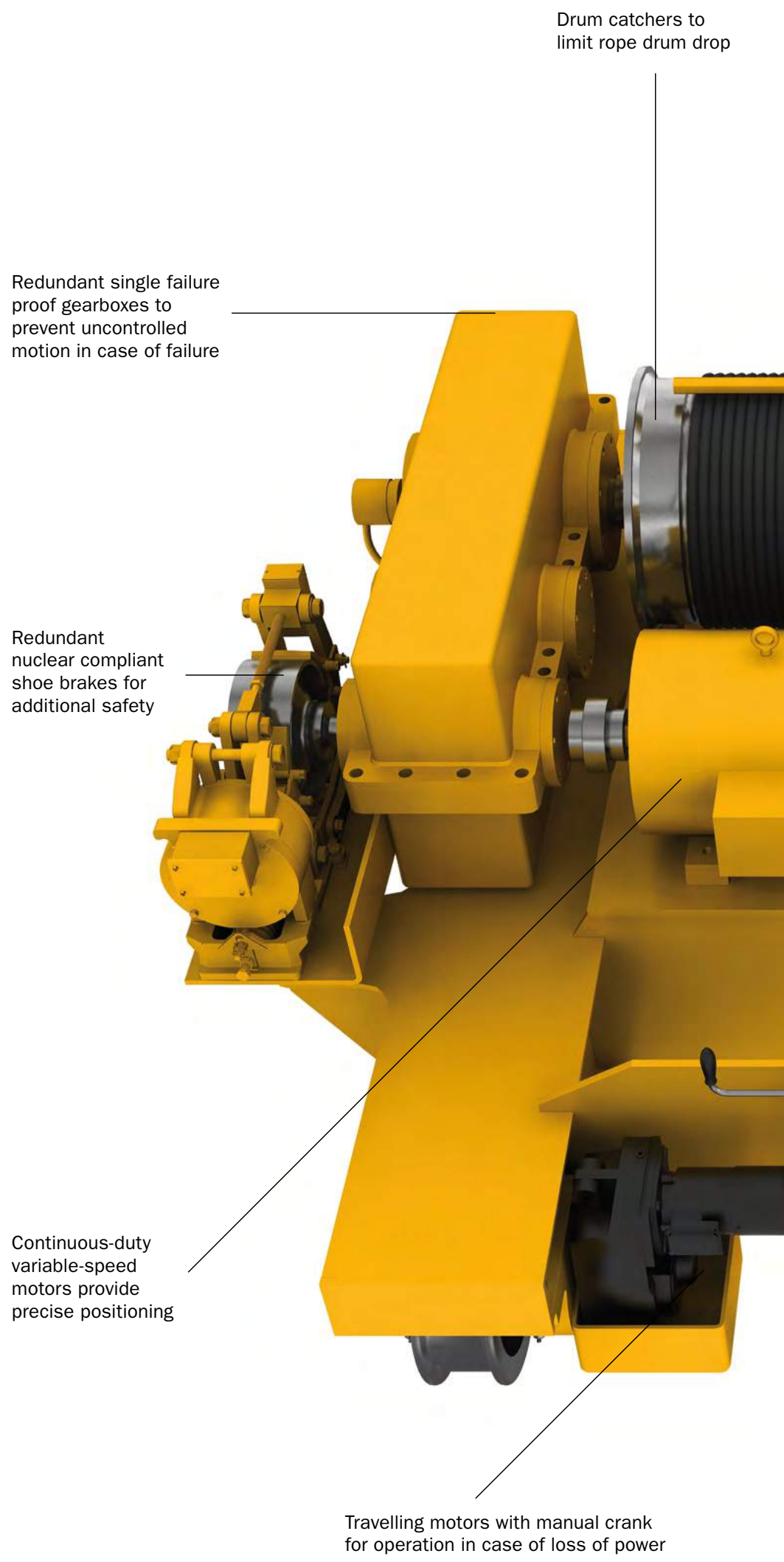

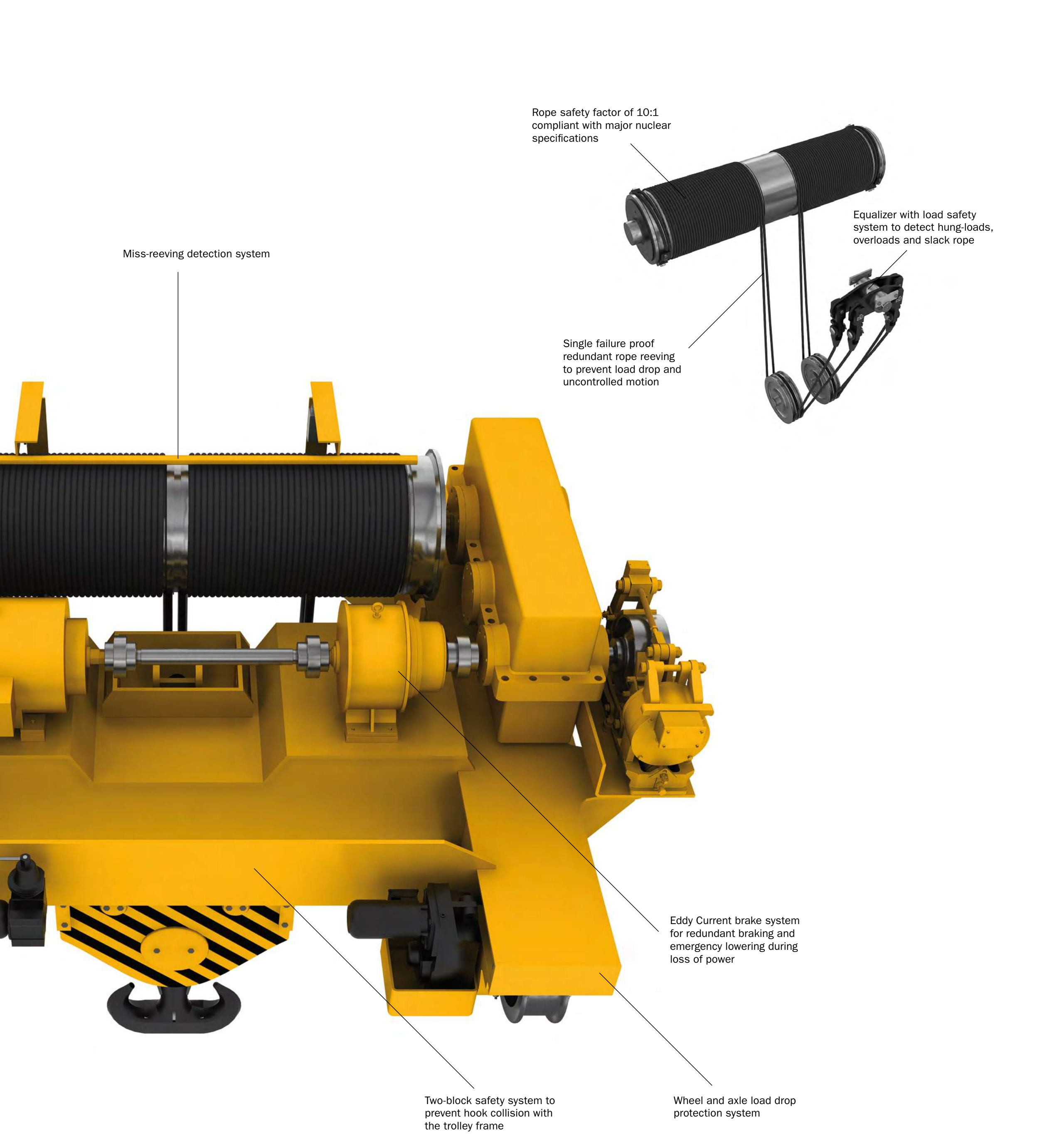
Rope safety factor of 10:1 compliant with major nuclear specifications
Equalizer with load safety system to detect hung-loads, overloads and slack rope
Miss-reeving detection system
Single failure proof redundant rope reeving to prevent load drop and uncontrolled motion
Eddy Current brake system for redundant braking and emergency lowering during loss of power
Two-block safety system to prevent hook collision with the trolley frame
Wheel and axle load drop protection system

NUCLEAR POLAR CRANES

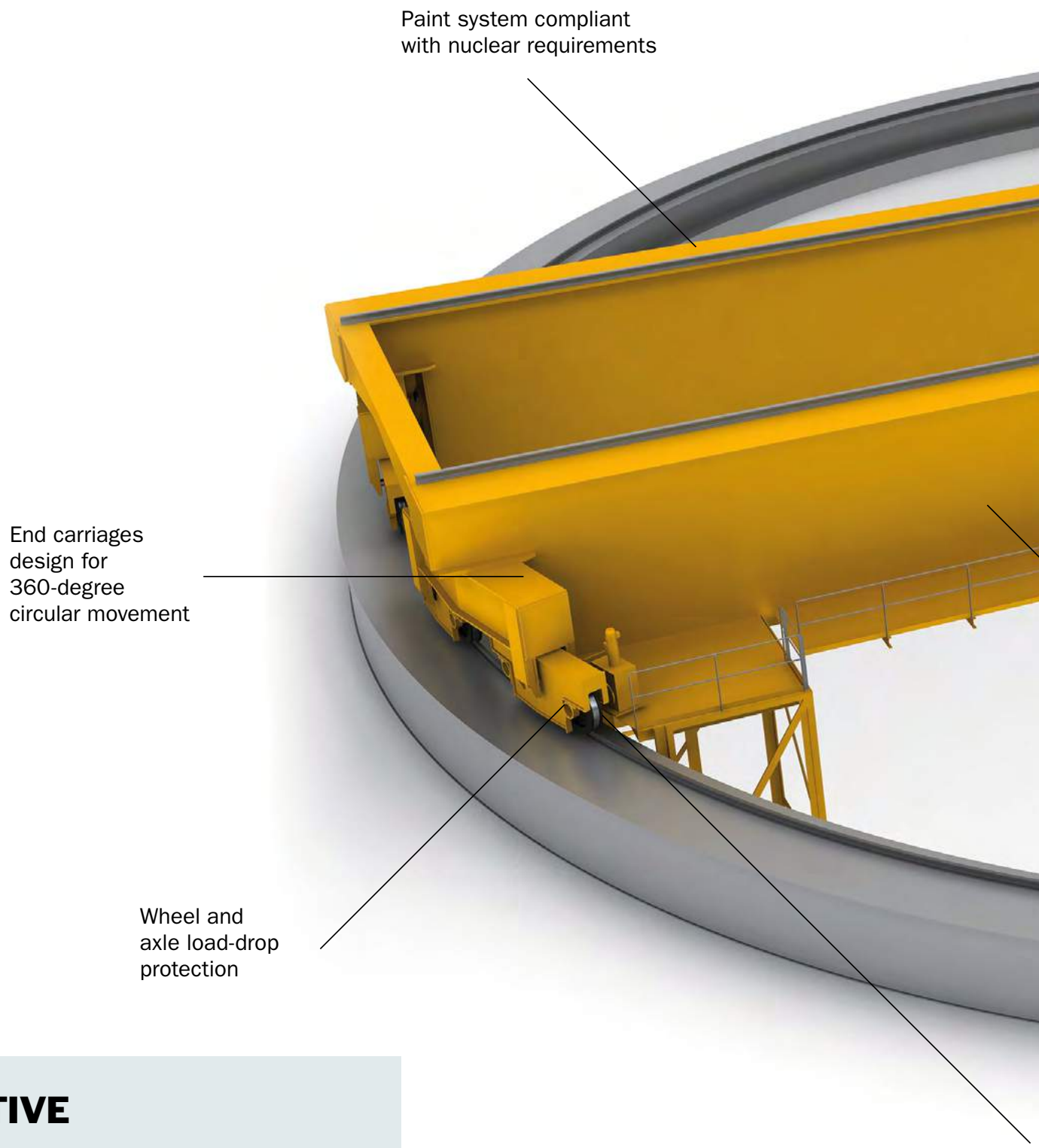

SMARTER FROM EVERY PERSPECTIVE

RELIABILITY
- Nuclear quality compliant
- Design based on over 50 years of operating experience
- Complete shop testing prior to shipment

EASIER, LESS FREQUENT MAINTENANCE
- Direct access to maintenance points
- On-board diagnostics
- Telescoping maintenance platform
- On-board maintenance jib crane

SAFETY AND ERGONOMICS
- Single failure proof design available
- Fail-safe operator controls
- Walkways and platforms to maintenance areas

LOWEST LIFECYCLE COST
- Design based on total cost of ownership
- Fewer spares and less maintenance
- Weight optimization to reduce overall costs

PERFORMANCE
- Infinitely variable speed control
- User-friendly operator controls
- Precise load positioning

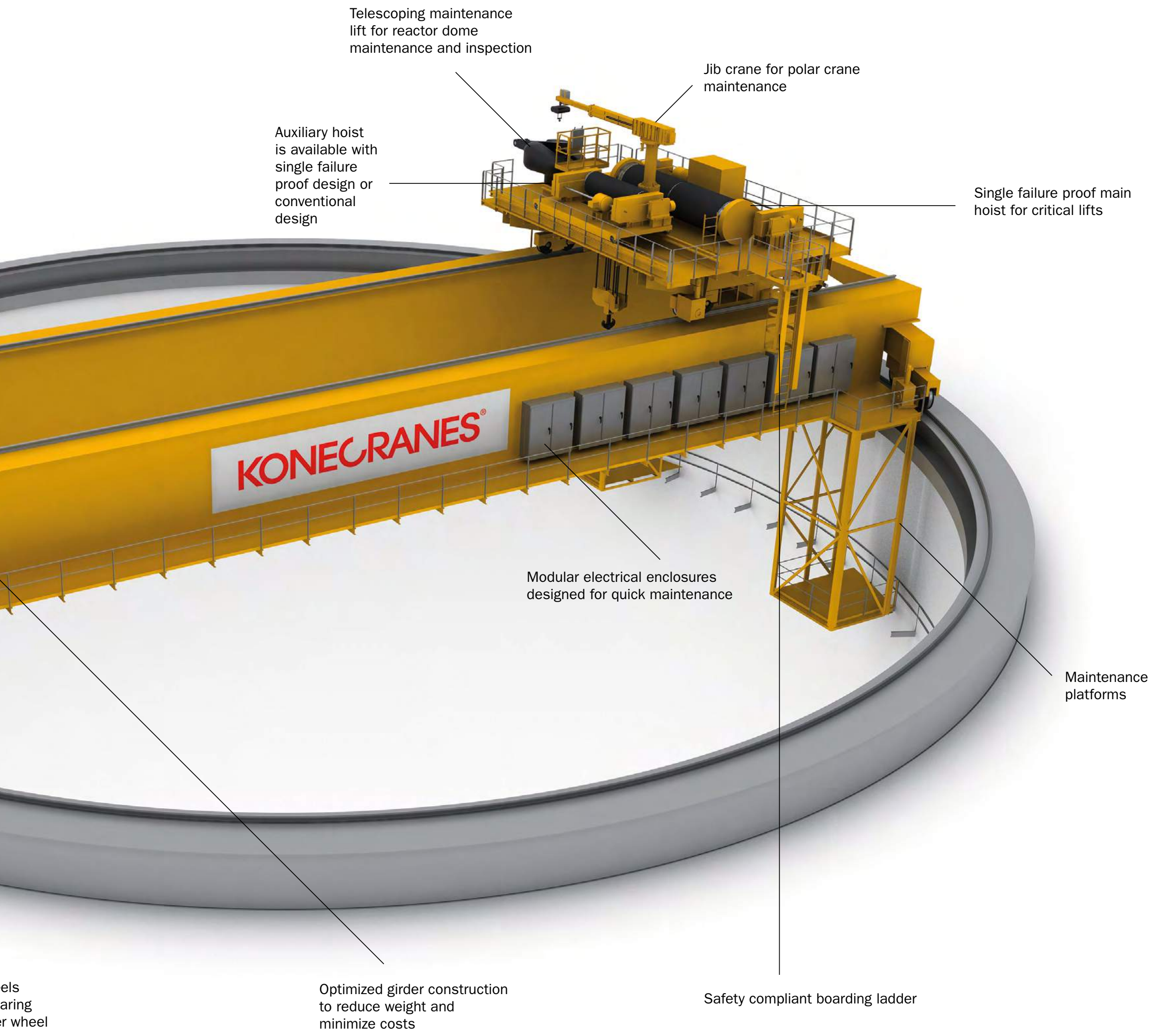
Telescoping maintenance lift for reactor dome maintenance and inspection
Jib crane for polar crane maintenance
Auxiliary hoist is available with single failure proof design or conventional design
Single failure proof main hoist for critical lifts
KONECRANES®
Modular electrical enclosures designed for quick maintenance
Maintenance platforms
els
aring
er wheel
Optimized girder construction to reduce weight and minimize costs
Safety compliant boarding ladder

FUEL HANDLING EQUIPMENT

SMARTER FROM EVERY PERSPECTIVE

RELIABILITY
- Multiple redundant features
- Absolute encoders for reliable positioning
- Real-time operational feedback on operators console

EASIER, LESS FREQUENT MAINTENANCE
- Direct access to maintenance points
- On-board diagnostics simplify maintenance
- Stainless steel mast and fuel grappel construction to prevent corrosion

SAFETY AND ERGONOMICS
- Single failure proof hoist design
- Fail-safe operator controls
- Multiple cameras maximize operator visibility
- Full bridge walkways for safer operator egress
- Provisions for emergency operation of grapple

LOWEST LIFECYCLE COST
- Design based on total cost of ownership
- Designed for minimization of spares
- Rollers in mast can be removed and replaced without disassembling the mast
- Maintenance-friendly design simplifies maintenance process

PERFORMANCE
- Bridge and trolley utilize variable speed motors and controls for precision movements and automated positioning (Accuracy +/- 0.5 mm)
- User-friendly operator controls
- User-friendly touch screen designed to allow use by operators wearing multiple layers of gloves
- Power rotational mast available
- Automated sipping in-line with mast to allow parallel fuel movements while sipping

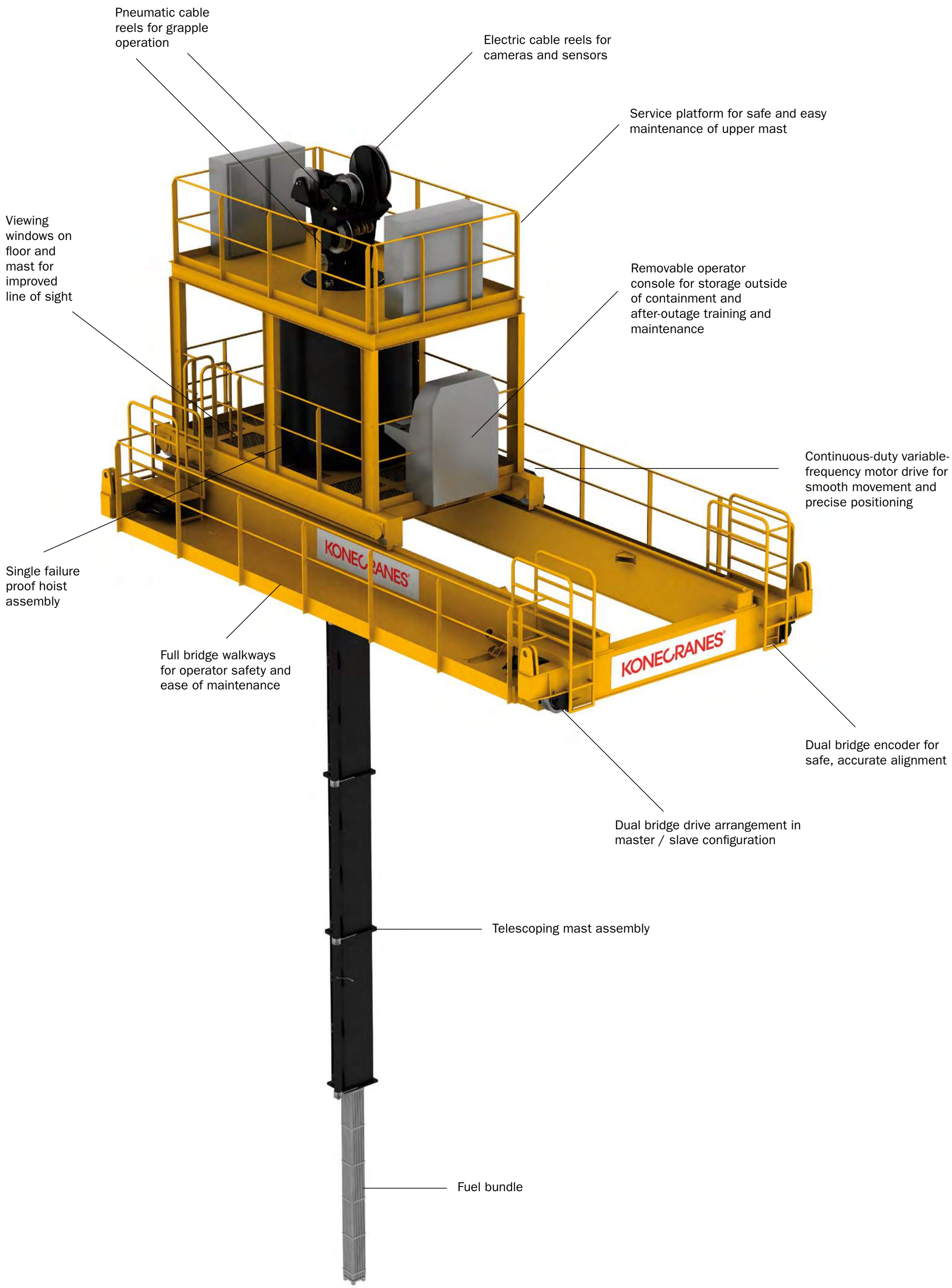
Pneumatic cable reels for grapple operation
Electric cable reels for cameras and sensors
Service platform for safe and easy maintenance of upper mast
Viewing windows on floor and mast for improved line of sight
Removable operator console for storage outside of containment and after-outage training and maintenance
Continuous-duty variable-frequency motor drive for smooth movement and precise positioning
Single failure proof hoist assembly
Full bridge walkways for operator safety and ease of maintenance
Dual bridge encoder for safe, accurate alignment
Dual bridge drive arrangement in master / slave configuration
Telescoping mast assembly
Fuel bundle

CASK TRANSPORTER

SMARTER FROM EVERY PERSPECTIVE

RELIABILITY
- Nuclear quality compliant
- Redundant travel motors
- Foam-filled aircraft tires cannot go flat
- Real-time operator feedback maximizes reliability

EASIER, LESS FREQUENT MAINTENANCE
- Direct access to maintenance points
- On-board diagnostics
- Modular design simplifies maintenance

SAFETY AND ERGONOMICS
- Load-drop protection system
- Fail-safe operator controls
- User monitoring system
- Overload protection system
- Operator interlocks provide added safety

LOWEST LIFECYCLE COST
- Design based on total cost of ownership
- Designed to minimize maintenance
- Standardized industrial components

PERFORMANCE
- Designed to minimize damage to roadways
- User-friendly operator controls
- Precise positioning and steering capability
- Infinitely variable speed control

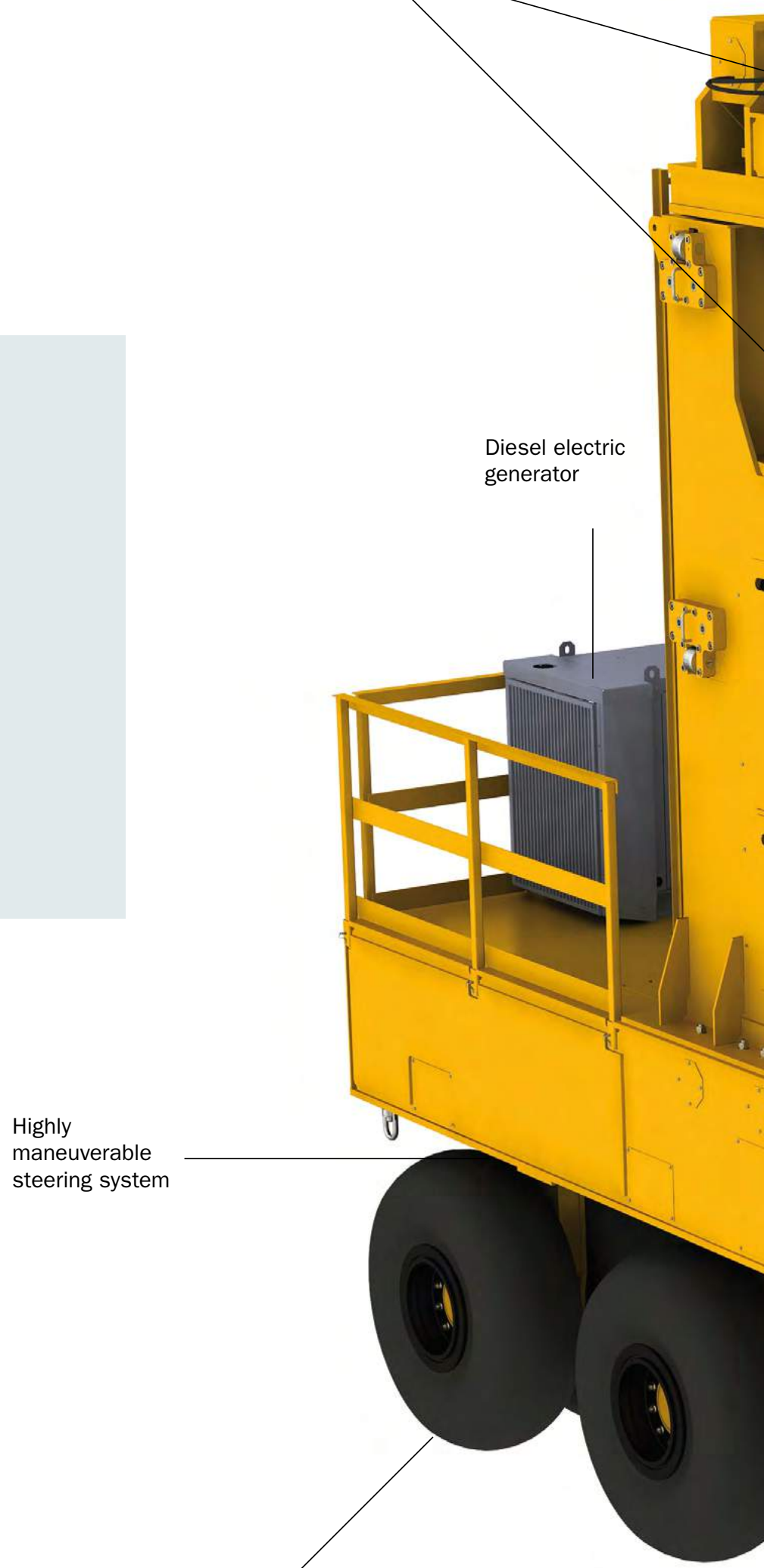

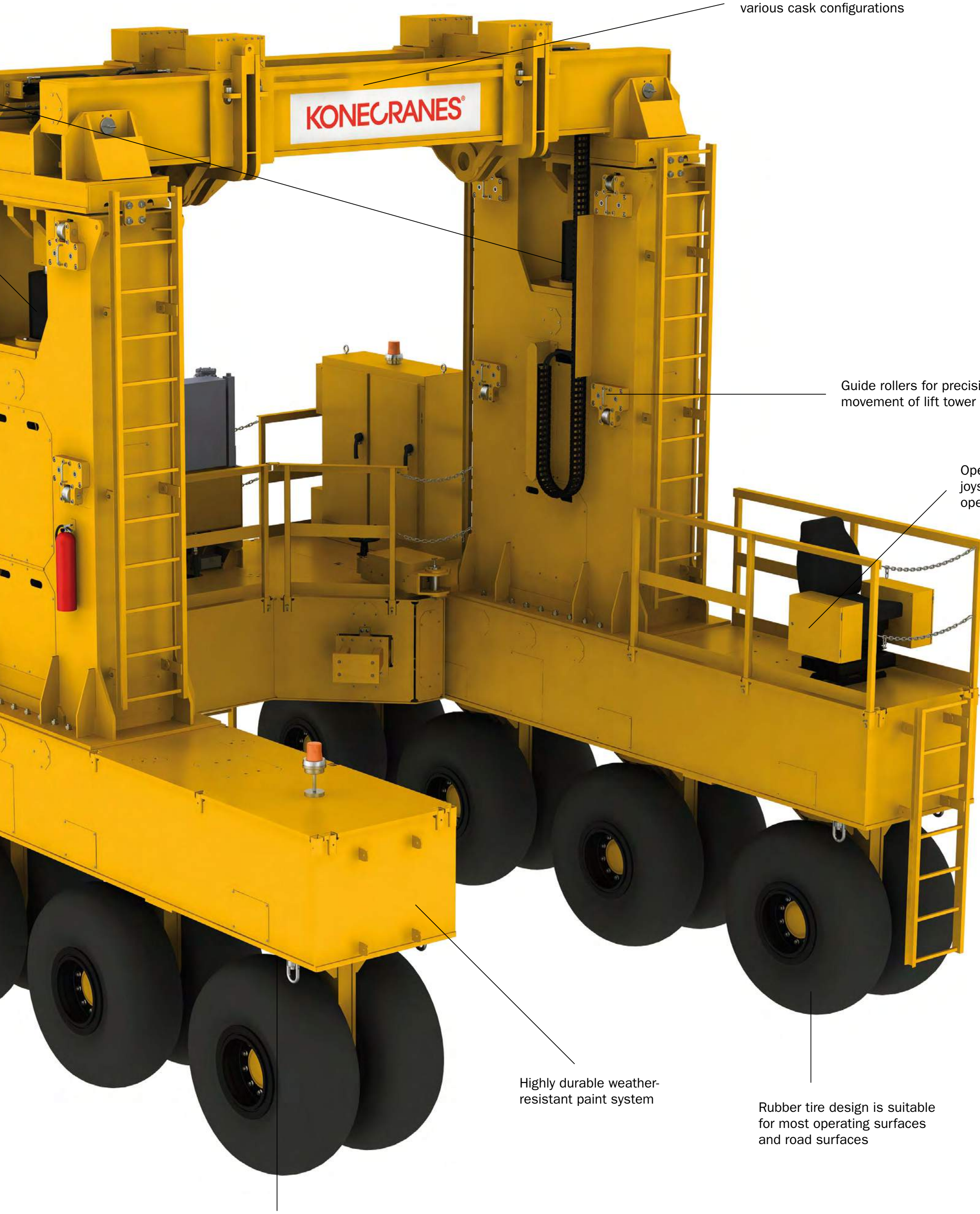

Adjustable lifting beam for various cask configurations

Guide rollers for precision movement of lift tower

Operator's seat with joysticks for user-friendly operation

Highly durable weather-resistant paint system

Rubber tire design is suitable for most operating surfaces and road surfaces

Independent drives for redundancy

CASK CRANE

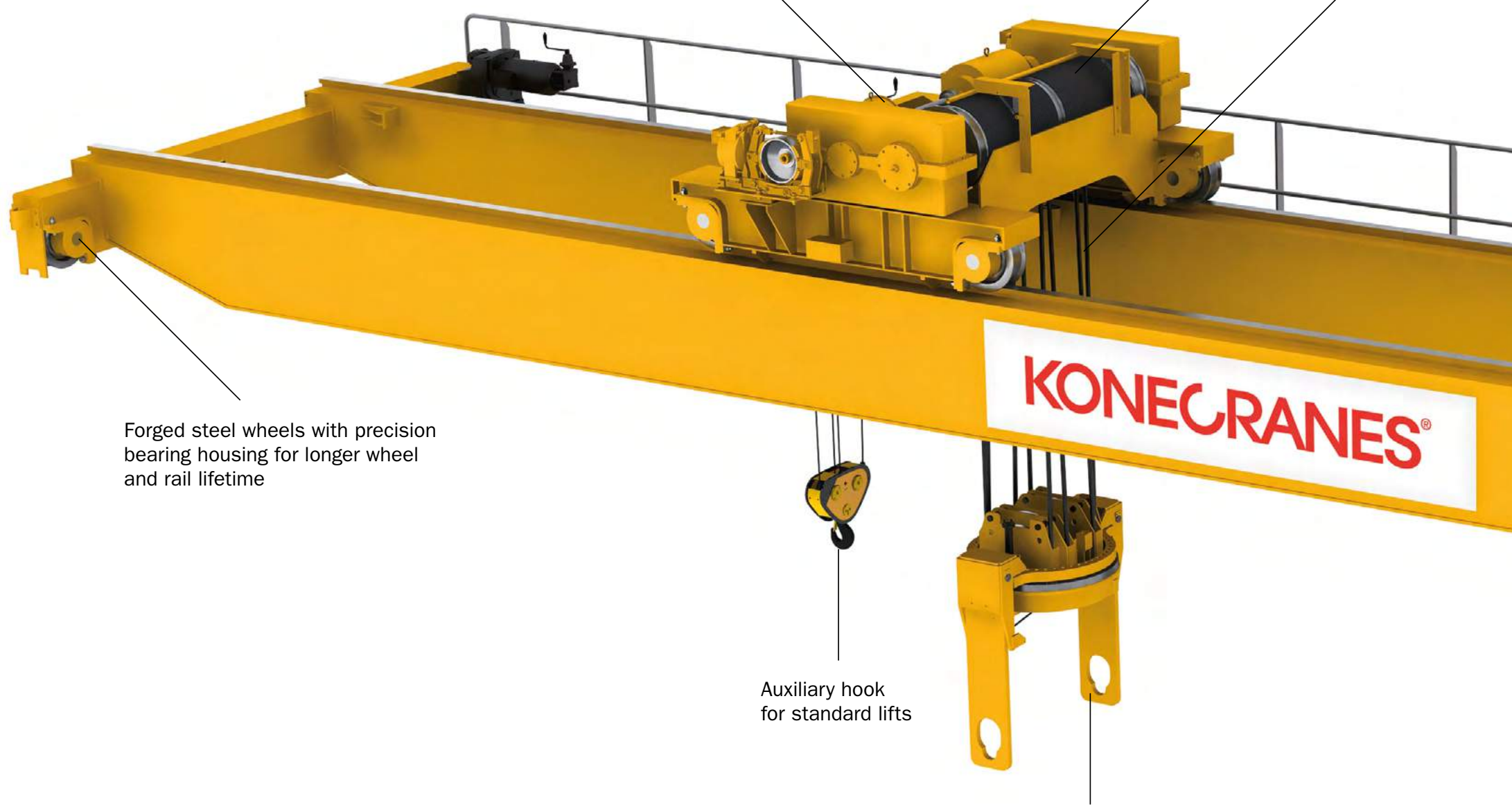

SMARTER FROM EVERY PERSPECTIVE

RELIABILITY
- Multiple redundant single failure proof features provide added reliability
- Third generation design based on over 50 years of operating history
- Real-time operator feedback

EASIER, LESS FREQUENT MAINTENANCE
- Direct access to maintenance points
- On-board diagnostics

SAFETY AND ERGONOMICS
- Single failure proof hoist design
- Fail-safe operator controls
- Walkways and platforms to maintenance areas

LOWEST LIFECYCLE COST
- Design based on total cost of ownership
- Fewer spares and less maintenance
- Weight optimization to reduce overall costs

PERFORMANCE
- Infinitely variable speed controls
- User-friendly operator controls
- Precise positioning capability
- Integrated cask grappel system

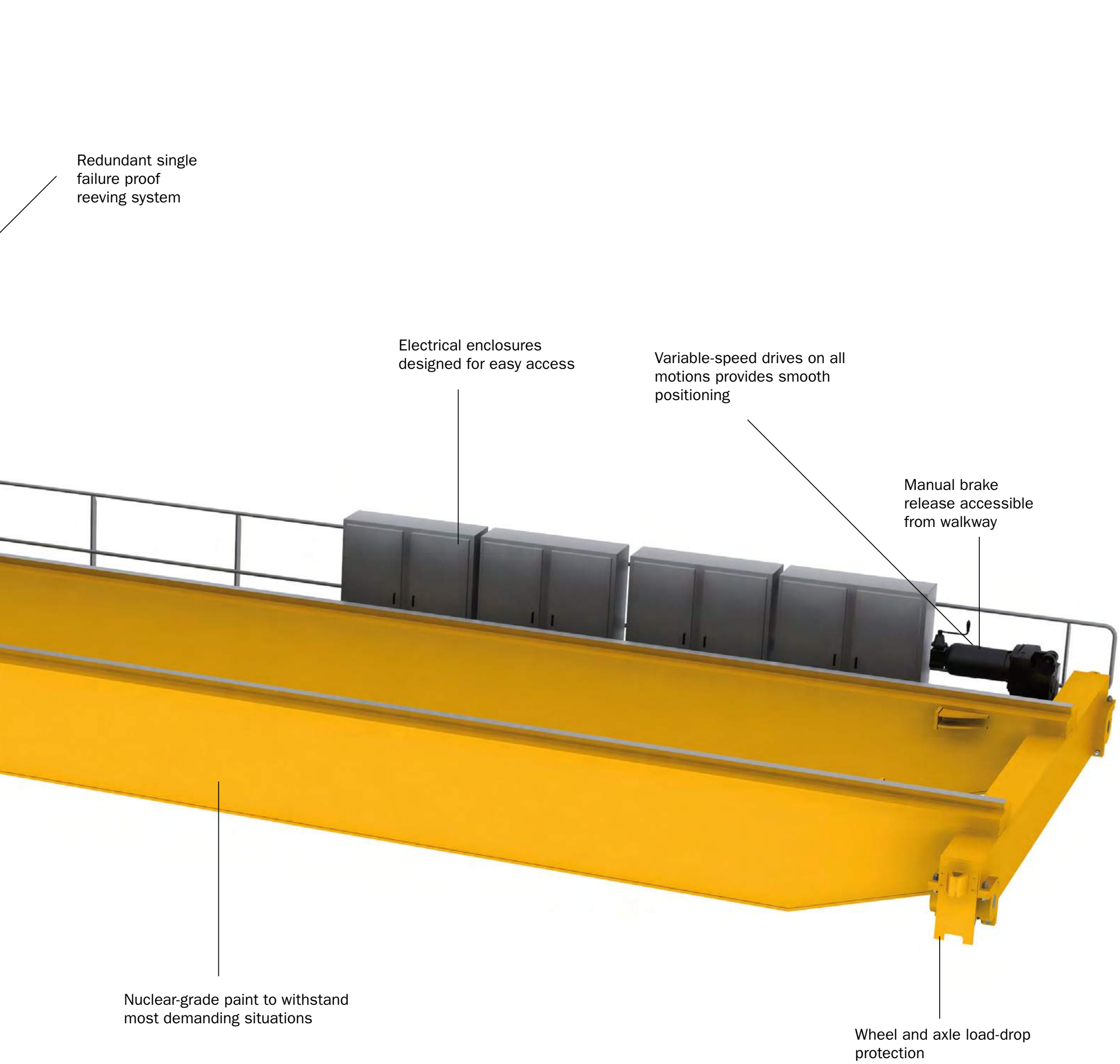
Redundant single failure proof reeving system
Electrical enclosures designed for easy access
Variable-speed drives on all motions provides smooth positioning
Manual brake release accessible from walkway
Nuclear-grade paint to withstand most demanding situations
Wheel and axle load-drop protection

TURBINE CRANE

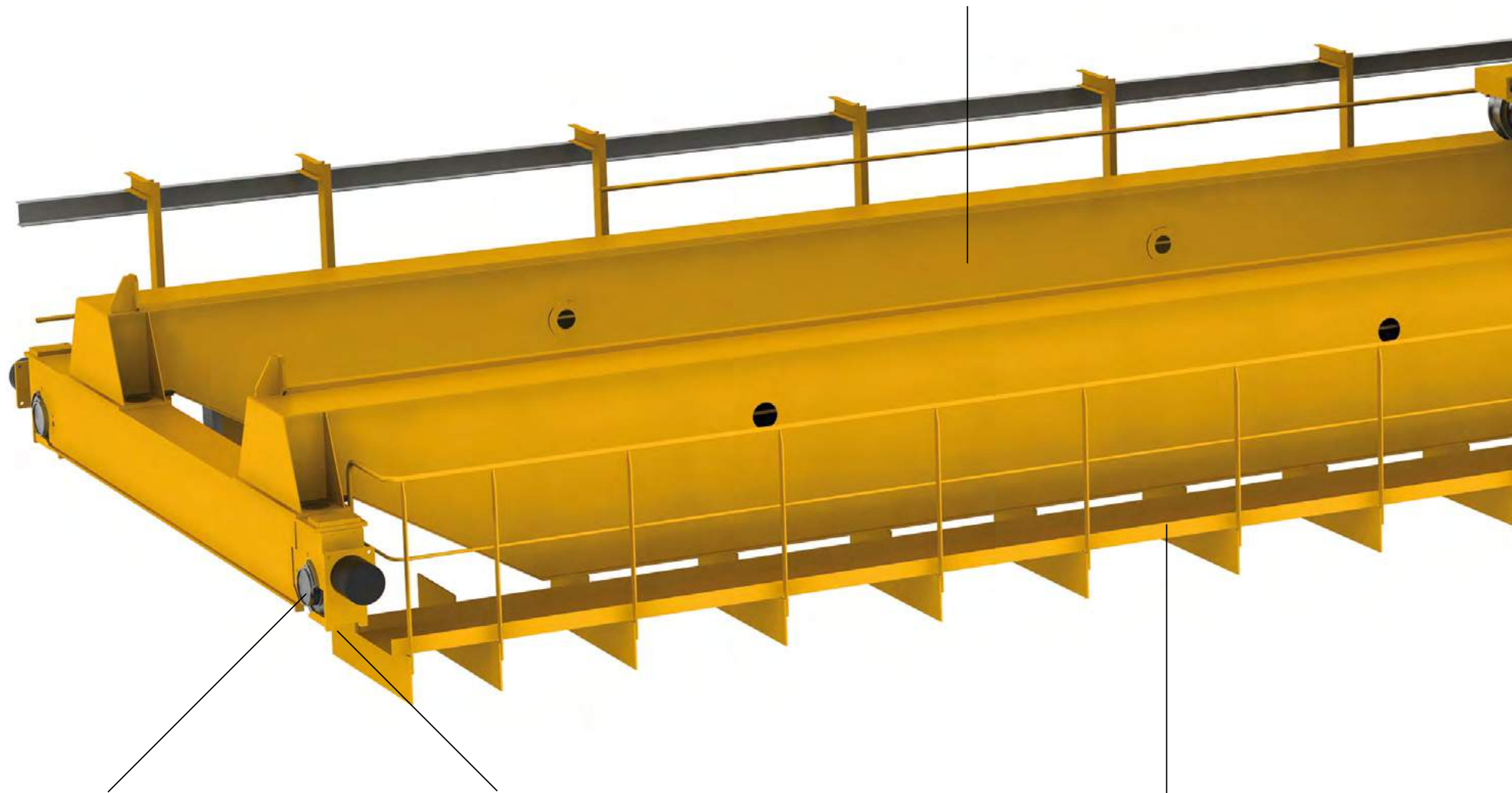

SMARTER FROM EVERY PERSPECTIVE

RELIABILITY
- Shop tested prior to delivery
- Highly reliable solid state crane controls
- On-board diagnostics provide continuous operator feedback

EASIER, LESS FREQUENT MAINTENANCE
- Direct access to maintenance points
- Optimized maintainability based on over 50 years of nuclear experience

SAFETY AND ERGONOMICS
- Walkways and platforms to maintenace areas
- Fail-safe operator controls
- Overload protection system
- Optional single failure proof design is available

LOWEST LIFECYCLE COST
- Design based on total cost of ownership
- Fewer spares and less maintenance
- Weight optimization to reduce overall costs

PERFORMANCE
- Infinitely variable speed control provides precise positioning
- User-friendly operator controls
- Optimized hook approaches maximize lifting capability

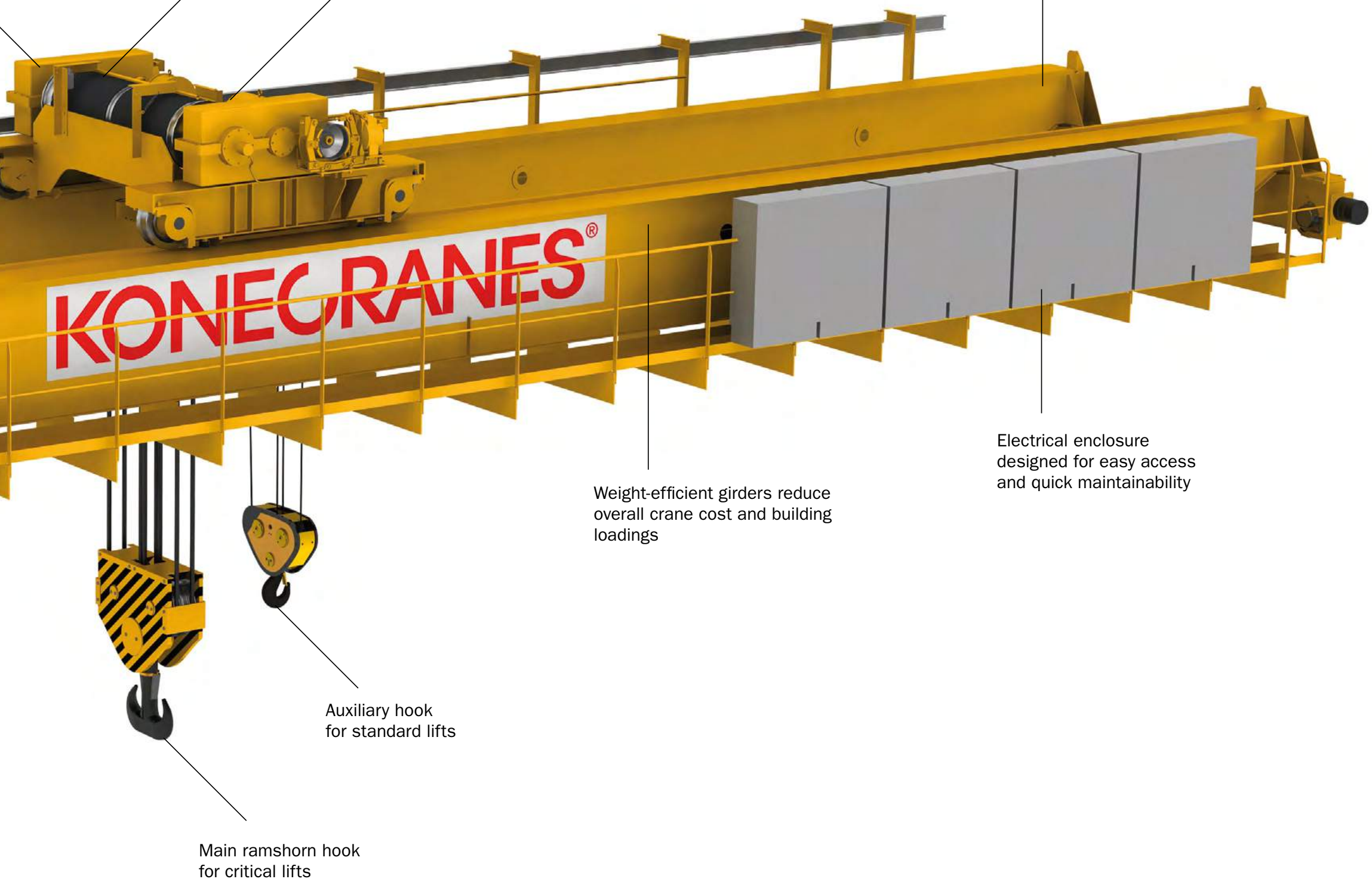

Main hoist available as conventional or single failure proof design for critical lifts

Auxiliary hoist available as conventional or single failure proof design for lower capacity lifts

Variable-speed drives on all motions provide smooth positioning

Weight-efficient girders reduce overall crane cost and building loadings

Electrical enclosure designed for easy access and quick maintainability

Auxiliary hook for standard lifts

Main ramshorn hook for critical lifts

STANDARDIZED HOISTS AND CRANES

The Konecranes product range includes standardized conventional cranes, hoists and material handling equipment for areas within nuclear facilities, such as maintenance cranes. These types of equipment use time-proven designs and are available in a wide range of configurations.

Examples of conventional equipment include top-running and under-running cranes, monorail hoists, top-running hoists, jib cranes, chain hoists and gantry cranes. A full range of optional features provides the flexibility to customize these products to your specific application. Duty classification, speed, and control methods are just a few of the wide variety of crane features that can be tailored to your requirements.

SMARTON® trolley
SMARTON® lifts from 6.3 to 250 tons with a single trolley, and up to 500 tons with two trolleys. With the availability of numerous optional features, and the cost-efficient standardized design, these units are suitable for many applications.

Jib crane
Konecranes jib cranes provide a cost-efficient and user-friendly method of material handling. These units utilize a weight-efficient design and are easy to install. Standard headroom units and low headroom units are available along with numerous of optional features.

CXT wire rope hoist
Konecranes CXT hoists are available with normal or low headroom designs and many optional features. These units can be provided with monorail or top running trolleys and are designed to meet a wide range of duty cycles. The compact design of these units makes them adaptable to many applications.

CLX electric chain hoist
Konecranes CLX electric chain hoists are easy to use, and with a load range of 60 kg to 5,000 kg they are extremely versatile. Hook suspension, push trolley, and motorized trolley designs are available, along with many optional features.

SMARTON® crane
SMARTON® is designed to maximize customer productivity and minimize total lifecycle costs. Depending on the options, SMARTON® can lift loads ranging from 30 tons to more than 500 tons. SMARTON® offers a selection of standardized components that are intelligently designed and coordinated. This innovative crane can be quickly configured to suit your needs.

Learn more about our other industry offerings.

AUTOMOTIVE

CONTAINER HANDLING

POWER

SHIPYARDS

MINING

PETROCHEMICAL

MANUFACTURING

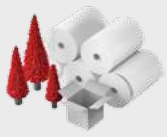

PULP AND PAPER

STEEL

WASTE TO ENERGY

WHY CHOOSE KONECRANES FOR LIFTING STEEL?

Technology
We understand how lifting technology is critical throughout the steel production process. Our long years of experience and continuous investments in R&D drive our innovation.

Expertise
Konecranes' technical and service teams are expert in every stage of steel manufacturing, constantly striving to help you produce more steel.

People
Our teams are strong because they are made of strong individuals; passionate, trained, motivated to serve customers and be the best in the business.

Safety
At Konecranes, no job is so important or service so urgent that we cannot take the time to do our work safely and correctly.

50+ YEAR HISTORY, 50+ YEAR FUTURE

Konecranes provides its products and services globally through almost 600 worldwide facilities, with virtually every type of lifting equipment typically used at nuclear power generation facilities. This includes a complete range of standard off-the-shelf items that can be delivered from stock, as well as highly specialized equipment such as single failure proof cranes, or fuel handling equipment.

Our holistic approach to customer service means we provide and install what we sell, but it doesn't stop there. We realize that you rely on us to provide solutions for long-term success, and ongoing support services to keep your equipment operating safely, reliably and efficiently. Whether you need outage support, repair services, engineering support, or anything in between, we have the resources to provide the support you need. We leverage our experience of over a half century in the nuclear industry to provide the best equipment and service in the business.

We don't just lift things,
"WE LIFT YOUR BUSINESS."

konecranes.com